adoniTech

Technical Report

Date: 26-10-2024

Time: 01:44 PM

Customer Information

Project Name: Crane C27 (RM Goliath Crane) -LT Buffer
Name: Mr. Hiren Patel
Email: ail.mktg@anupamgroup.com
Phone: 9824955077
GSTn:
Company: Anupam Industries Ltd.

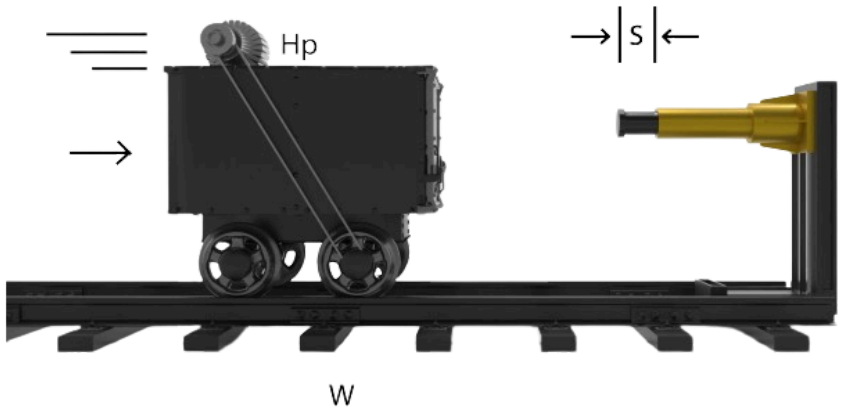

Model Name: EI 80 x 100 **Mounting:** Rear Flange Front Foot Mount **Spares:**

Customer Input Data

Mass	Velocity	Cycles	Stall Torque factor	Drawing Formats	Quantity
48000 Kg	0.700 M/sec	20 /hr	2.5	PDF	2

Calculated Parameters Per Shock Absorber

Kinetic Energy	Potential Energy	Total Energy	Energy Per Hour	Vd	Emass Min	Deceleration	Rate of Utilization/Stroke	Rate of Utilization/hr
5880 N-M	0	5880 N-M	58800 N-M	0.700 M/s	12000 Kg	3.67 M/s²	37.69 %	47.12 %

It looks like some input values are missing. Please check and enter all required information.

Note:
• If deaceleration is < than 5 m/s² then the model is Suitable for Crane Duty application as per IS 3317-2020 else unsafe.

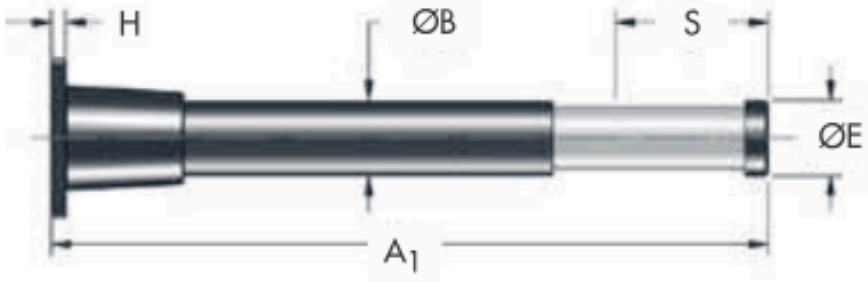

FR (FLANGE REAR)

MOUNTING FLANGE

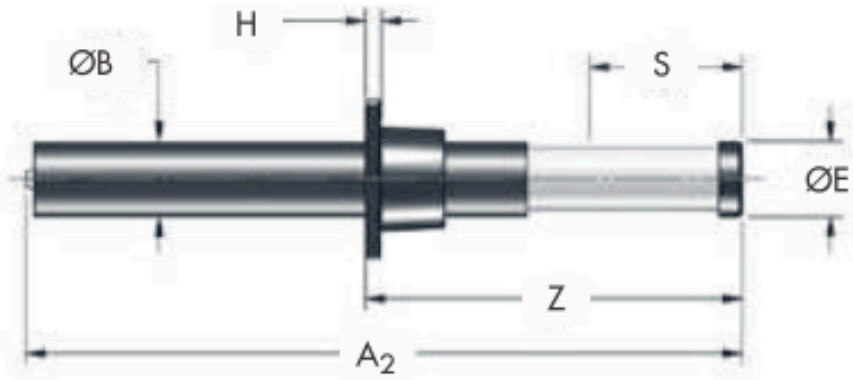

FF (FLANGE FRONT)

Catalog No. / Model	(S) Stroke mm	Max. Energy/ Cycle Nm/C	Max. Shock Force kN	Return Force Extension kN	Return Force Compression kN	Weigh Kg	A_1 mm	A_2 mm	Z mm	H mm	ØB mm	SA mm	SB mm	ØFC mm	Bolt Size mm	ØE mm
EI 50 x 50	50	3 500	70	0.5	3.2	5	262	–	–	15	65	100	70	14.5	M14	58
EI 50 x 100	100	6 900	70	0.3	0.6	9	392	–	–	15	65	100	70	14.5	M14	58
EI 80 x 50	50	7 800	160	1.0	1.9	16	324	–	–	15	85	128	89	20	M18	79
EI 80 x 100	100	15 600	160	1.0	8.0	22	424	–	–	15	85	128	89	20	M18	79
EI 100 x 50	50	11 500	235	1.65	18.0	16	302	301	175	20	100	150	120	18.5	M16	99
EI 100 x 100	100	23 000	235	1.65	18.0	22	479	473	245	20	100	150	120	18.5	M16	99
EI 100 x 150	150	34 500	235	1.65	18.0	28	618	612	300	20	100	150	120	18.5	M16	99
EI 100 x 200	200	46 000	235	1.65	18.0	32	756	750	390	20	100	150	120	18.5	M16	99
EI 100 x 400	400	92 000	235	1.65	18.0	46	1 349	1 345	645	20	100	150	120	18.5	M16	99
EI 100 x 500	500	108 000	235	1.65	18.0	52	–	1 616	890	20	100	150	120	18.5	M16	99
EI 100 x 600	600	129 000	220	1.65	18.0	58	–	1 888	1 040	20	100	150	120	18.5	M16	99
EI 100 x 800	800	156 000	200	1.65	18.0	69	–	2 426	1 345	20	100	150	120	18.5	M16	99
EI 120 x 100	100	37 000	375	2.8	50.0	34	471	467	270	20	120	220	170	26.5	M24	127
EI 120 x 150	150	55 000	375	2.8	50.0	39	597	593	330	20	120	220	170	26.5	M24	127
EI 120 x 200	200	74 000	375	2.8	50.0	43	724	720	390	20	120	220	170	26.5	M24	127
EI 120 x 300	300	108 000	375	2.8	50.0	53	973	969	520	20	120	220	170	26.5	M24	127
EI 120 x 400	400	144 000	375	2.8	50.0	87	1 225	1 221	680	25	120	220	170	26.5	M24	127
EI 120 x 600	600	216 000	375	2.8	50.0	105	–	1 725	915	25	120	220	170	26.5	M24	127
EI 120 x 800	800	259 000	330	2.8	50.0	110	–	2 332	1 290	25	120	220	170	26.5	M24	127
EI 120 x 1000	1000	299 000	300	2.8	50.0	116	–	2 836	1 360	25	120	220	170	26.5	M24	127